EcoStruxure Micro Data Center R-Series

MDC24UR500ACI, MDC24UR1KACI, MDC42UR2KACI

Installation

TME23731A
Release date: 1/2024

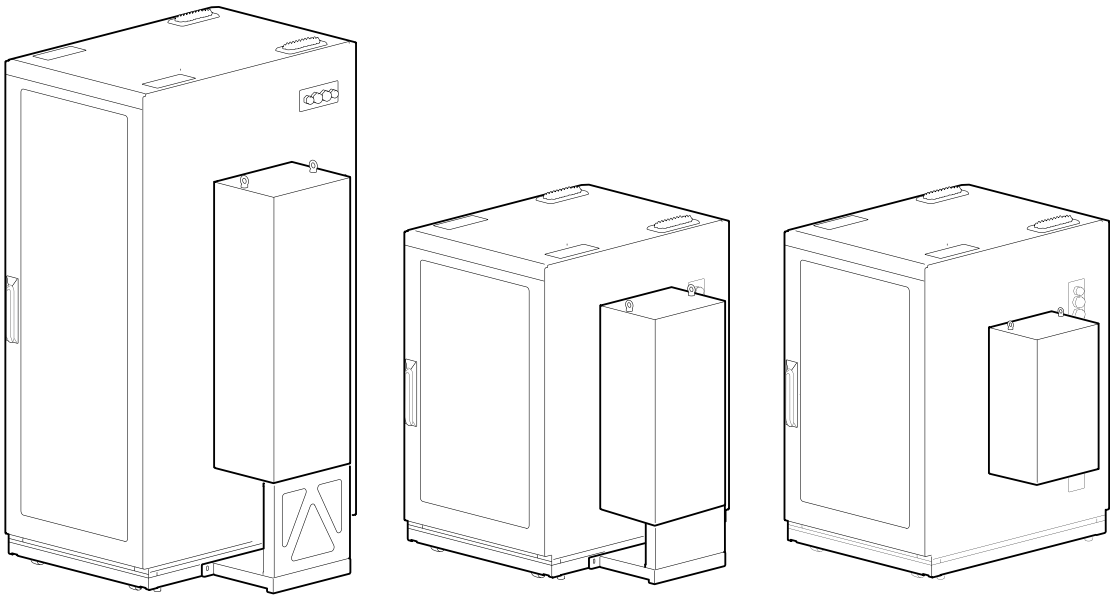

https://www.apc.com

Legal Information

Table of Contents

Important Safety Instructions — SAVE THESE INSTRUCTIONS

Read these instructions carefully and look at the equipment to become familiar with it before trying to install, operate, service or maintain it. The following safety messages may appear throughout this manual or on the equipment to warn of potential hazards or to call attention to information that clarifies or simplifies a procedure.

The addition of this symbol to a “Danger” or “Warning” safety message indicates that an electrical hazard exists which will result in personal injury if the instructions are not followed.

This is the safety alert symbol. It is used to alert the user to potential personal injury hazards. Obey all safety messages with this symbol to avoid possible injury or death.

⚠ DANGER

DANGER indicates a hazardous situation which, if not avoided, **will result in** death or serious injury.

Failure to follow these instructions will result in death or serious injury.

⚠ WARNING

WARNING indicates a hazardous situation which, if not avoided, **could result in** death or serious injury.

Failure to follow these instructions can result in death, serious injury, or equipment damage.

⚠ CAUTION

CAUTION indicates a hazardous situation which, if not avoided, **could result in** minor or moderate injury.

Failure to follow these instructions can result in injury or equipment damage.

NOTICE

NOTICE is used to address practices not related to physical injury. The safety alert symbol shall not be used with this type of safety message.

Failure to follow these instructions can result in equipment damage.

Please Note

Electrical equipment should only be installed, operated, serviced, and maintained by qualified personnel. No responsibility is assumed by Schneider Electric for any consequences arising out of the use of this material.

A qualified person is one who has skills and knowledge related to the construction, installation, and operation of electrical equipment and has received safety training to recognize and avoid the hazards involved.

Always abide strictly by local laws and regulations in force in the place of installation.

Safety Information for the Micro Data Center

⚠ DANGER

HAZARD OF ELECTRIC SHOCK

- Connect the Micro Data Center (MDC) frame to the building Common Bonding Network (CBN) according to local and national codes and guidelines. Grounding must be performed only by qualified personnel.
- Adhere to all national and local electrical codes when bringing power to the system.
- Follow safe electrical work practices and wear appropriate personal protective equipment (PPE) See NFPA 70E.
- Perform appropriate Lock Out/Tag Out procedures during equipment installation and maintenance.
- Electrical equipment must be installed, operated, serviced, and maintained only by qualified and authorized personnel.
- Remove incoming power to the MDC before performing any work. Always use a properly rated voltage sensing device to confirm there is no voltage in the system.
- Disconnect all power to the MDC before making changes to the power distribution panel configuration. Connections in the power distribution panel must only be installed and serviced by qualified electricians.

Failure to follow these instructions will result in death or serious injury.

⚠ WARNING

TIP/HEAVY EQUIPMENT HAZARD

- The MDC can be tipped. Use extreme caution when unpacking or moving.
- Use at least two people to unpack and move the MDC.
- When moving the MDC on its casters, ensure the path of the MDC is free of obstacles and debris. Never push the MDC from the sides.
- If possible, secure the MDC to the floor before installing equipment. If the MDC cannot be secured to the floor, install the heaviest equipment first and toward the bottom of the rack to prevent the MDC from becoming top-heavy.
- Wear appropriate personal protective equipment (PPE) and follow safe work practices.
- Do not extend more than one piece of equipment on sliding rails at a time.

Failure to follow these instructions can result in death, serious injury, or equipment damage.

NOTICE

The ambient operating temperature of a closed or multi-unit rack environment may be greater than the ambient temperature of the room. Ensure the ambient operating temperature of your rack environment does not exceed the rated ambient operating temperature for your equipment.

Guidelines for Edge Computing

ASHRAE has published guidelines for owners of Edge computing equipment such as your Micro Data Center (MDC). (Edge equipment performs computing outside of a commercial data center with strict environmental controls.) It is recommended that you follow these guidelines to help prevent equipment damage and extend the life of your MDC. You can download the guidelines from www.ashrae.org/technical-resources/bookstore/datacom-series.

Cybersecurity Recommendations

- Install the MDC in a restricted location, secured by access control doors.
- Provide authorized access only to necessary personnel, such as maintenance and service personnel.
- Mark restricted areas with clear signs that say “For authorized personnel only.”
- Record the access to restricted areas with a physical or electronic audit trail.

Translations and Additional Documents

You can find translations and additional documents at go2se.com/ref=*model/part number*.

Examples:

- www.go2se.com/ref=MDC15UR500ACI
- www.go2se.com/ref=MDC42UR2KACI

On the web page, select **Documentation > Product Documentation**.

General Information

The EcoStruxure™ R-Series Micro Data Center (MDC) is designed for low-density rugged environments. The MDC consists of an IP54-rated, free-standing rack with an integrated air conditioner. Models are differentiated by available mounting space and cooling capacity.

Model	Mounting space	Cooling Capacity
MDC24UR500ACI	24 U	500 W
MDC24UR1KACI	24 U	1,000 W
MDC42UR2KACI	42 U	2000 W

The air conditioner can be monitored by EcoStruxure IT (purchased separately).

Inventory

Exterior

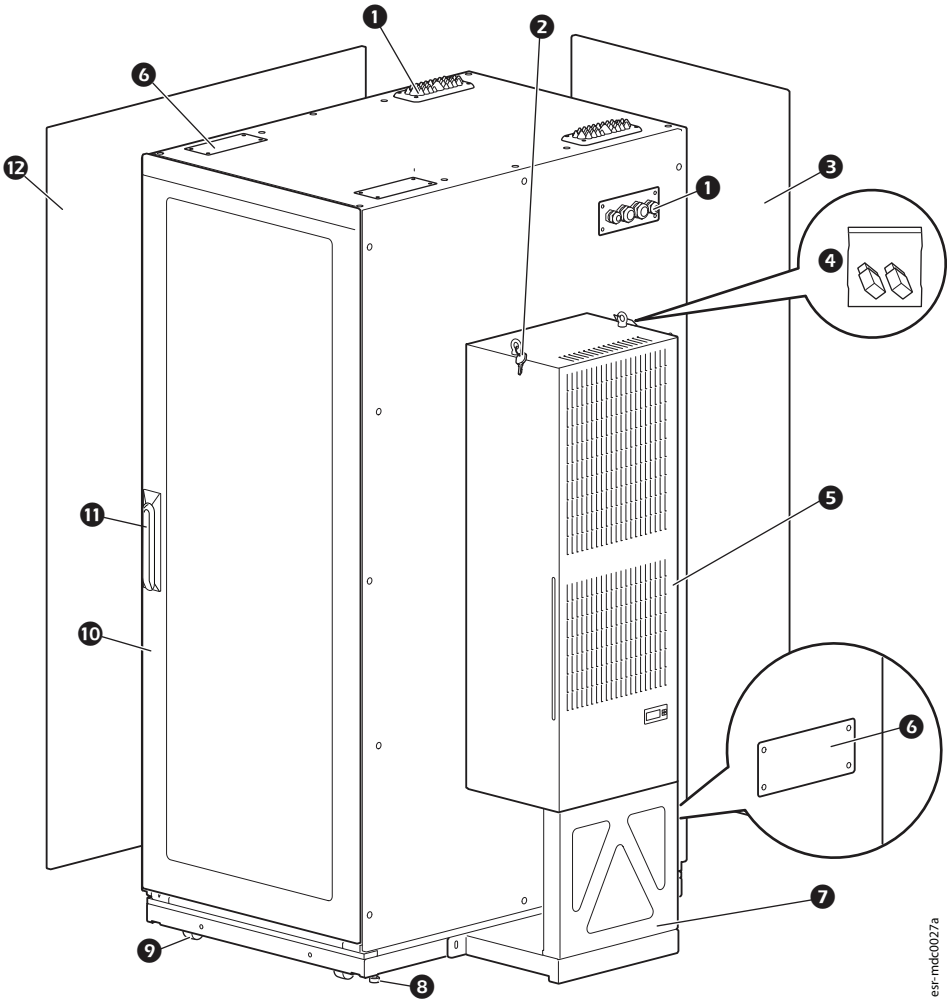

❶	Cable entry gland plate (3)	❼	Air conditioner support (MDC24UR1KACI, MDC42UR2KACI only)
❷	Door key (1)	❽	Leveling feet (4)
❸	Rear door, solid (1)	❾	Casters (4)
❹	Wire-splicing connectors (2)	❿	Front door, glass panel (1)
❺	Air conditioner (1)	⓫	Handle with key lock (2)
❻	Mounting spaces (3) for additional cable gland plates (NSYAECPFLT35, not included)	⓬	Removable side panel (1)

NOTE: The eye bolts on the air conditioner are not used.

NOTE: The label with the part number and serial number of your unit is located on the inside of the rear door, at the bottom-right.

Interior

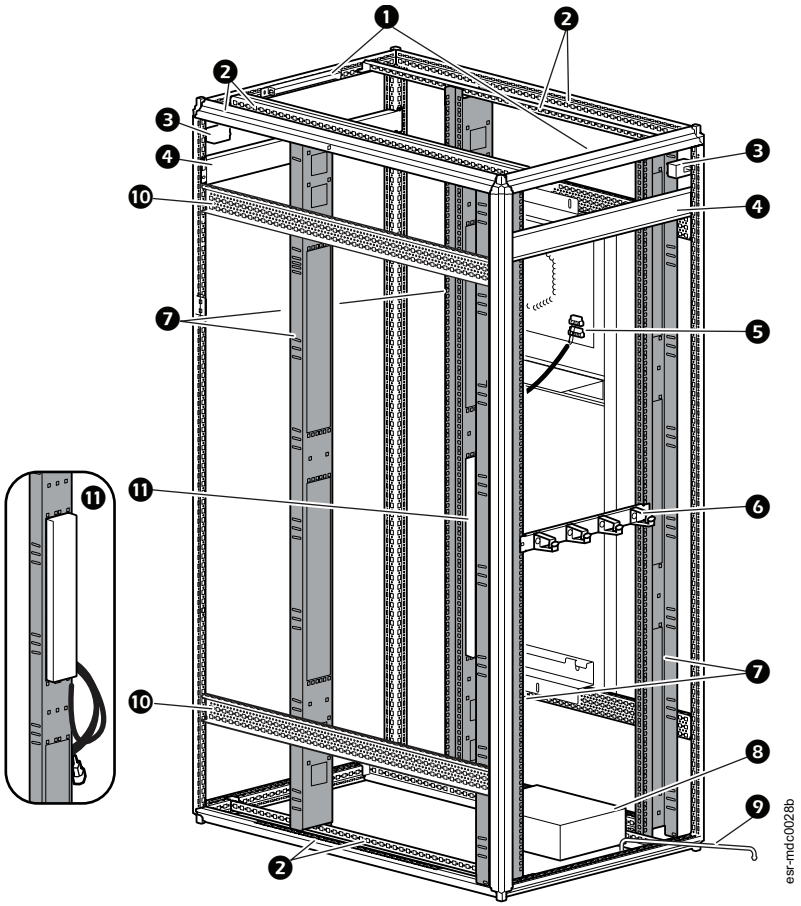

❶	Lights (2)	❼	Vertical mounting rails for 19-in/483-mm equipment, with additional mounting holes for 0-U side-mounted equipment (4)
❷	Mounting depth channels (8)	❽	Accessory box (1)
❸	Limit switches for lights (2)	❾	Door stopper (1, not used)
❹	Moving stabilization brackets (2), 42-U units only (remove before installation)	❿	Side stiffeners (4)
❺	Air conditioner power connection (1)	⓫	Power distribution panel and C14 power cord (1)
❻	Cable manager (1)		

Accessory Box Contents

TORX ® T30/#2 Phillips tool (1)

Cage nut tool (1)

Lifting eye bolts (4)

Fire extinguisher bracket and hardware:

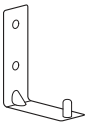

Hanging bracket for fire extinguisher (1)

M6 Phillips head screws (2)

M6 washers (2)

Hardware Bag:

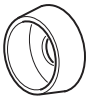

Plastic Cup Washer (40)

M6 Cage Nut (40)

M6 Phillips head screws (40)

Not Shown:
- Air conditioner user manual
- Air conditioner drain pipe (3 m)

NOTE: You must install the M6 Phillips head screws and washers to seal the MDC. The hanging bracket is optional.

Wiring Diagram

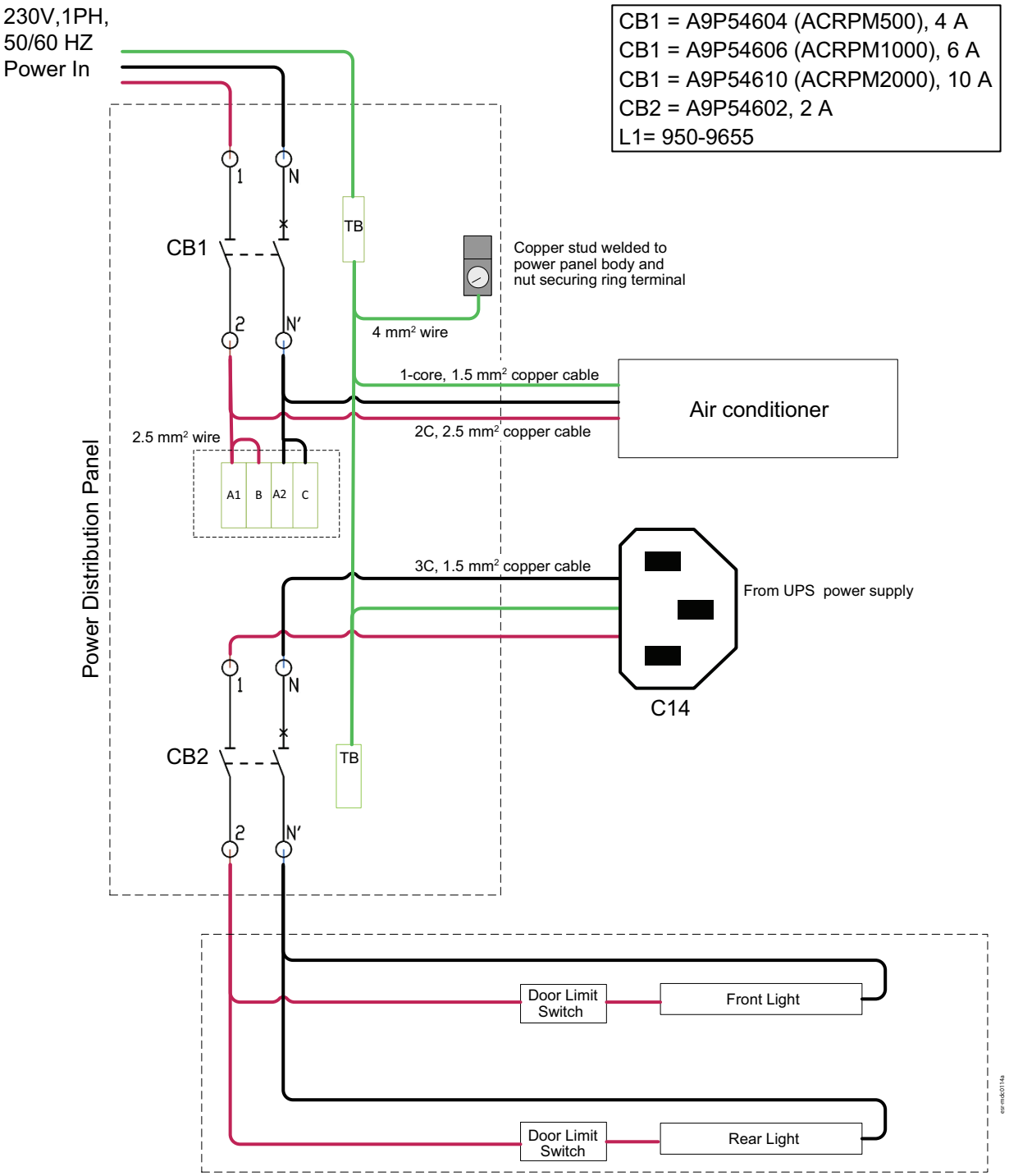

NOTE: The part (A9P546●●) used for Circuit Breaker 1 (CB1) varies depending on the air conditioner model. ACRPM500 is used in 500-W units. ACRPM1000 is used in 1000-W units. ACRPM2000 is used in 2000-W units.

Tools Required (Not Provided)

Hardware:

- Common Bonding Network Jumper Kit with at least 6 AWG wire for grounding
- Torque drivers with the following heads:
  - M12 socket (for fasteners on top of the MDC)
  - 10-mm hex (for the gland plates)
  - T40 or T45 (for the building ground connection)
  - #2 Phillips (for the fire extinguisher bracket)
- #2 and #1 Phillips head screw drivers (for equipment installation and the power distribution panel, respectively)
- 13-mm hex wrench (for the leveling feet)
- M8 socket driver (for the shipping bracket)
- T26 and T30 drivers (for mounting rails, and side panels/doors/interior ground wires, respectively)

Power connection wire: Single phase 230 V +/- 10%, 50/60 Hz , 3-core, 14 AWG

NOTE: By default, the power connection only provides power to the air conditioner. Different wire thicknesses may be required for custom configurations.

Recommended equipment:

- Rack PDU or UPS to power MDC lights
- If the input power is not guaranteed to remain within 230 V +/-10%, consider installing a voltage stabilizer between the power source and the MDC.
- If a drain is not available, or if the drain pipe must be routed upwards, consider installing a condensate evaporator or condensate pump.
- If condensation is likely to form in the interior of the MDC, consider installing a hygrometer and resistance heater. See Considerations for Condensation, page 15 for more information about environments condusive to condensation.

MDC Installation

Before installing the MDC, ensure your power connections are properly configured. See Tools Required (Not Provided), page 14 for connection specifications.

If the input power is not guaranteed to remain within 230 V +/-10%, consider installing a voltage stabilizer between the power source and the MDC. The factory warranty does not cover damages caused by overvoltage.

Considerations for Location

Consider the location for your MDC prior to its arrival. You must have access to the building power supply. At the final location, ensure there is at least 1 m (3 ft) of open space around the MDC to open the doors, remove the side panel, and provide reasonable working space.

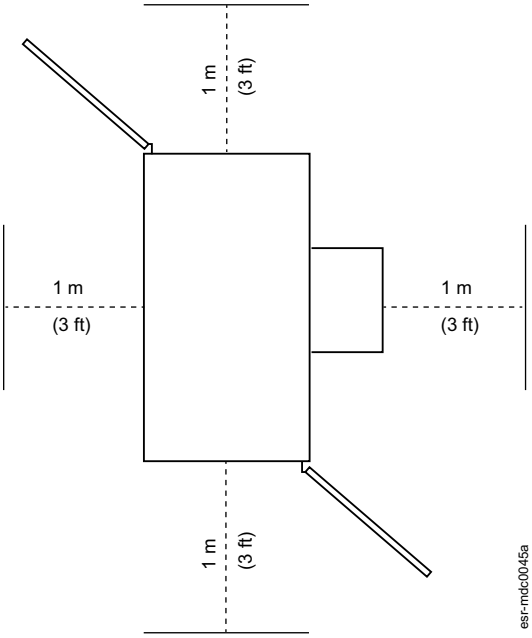

Considerations for Condensation

A drain is required to remove condensate from within the air conditioner. Ensure a drain is nearby and route the drain pipe (included in the accessory box) to the drain. If a drain is not available, or if the drain pipe must be routed upwards, consider installing a condensate evaporator or condensate pump (not provided).

Low temperature and high humidity may also allow condensate to form on the interior of the MDC. Condensation on the interior of the MDC can have a negative impact on the MDC and any installed equipment. If condensation is likely to form in your environment, consider the following measures to help protect your equipment.

- Install a hygrometer and resistance heater in the MDC.
- Ensure cable and piping entries are to the MDC are sealed.
- Keep the MDC door closed during operation.

High temperature and high humidity may cause condensation to form on exterior of the front door. This is normal and does not affect operation.

Move the MDC

⚠WARNING

TIP / HEAVY EQUIPMENT HAZARD

- The MDC can be tipped. Use extreme caution when unpacking or moving.
- Use at least two people to unpack and move the MDC.
- When moving the MDC on its casters, ensure the path of the MDC is free of obstacles and debris.
- When moving the MDC on its casters, make sure the leveling feet are up and push the MDC from the front or rear. Never push the MDC from the sides.

Failure to follow these instructions can result in death, serious injury, or equipment damage.

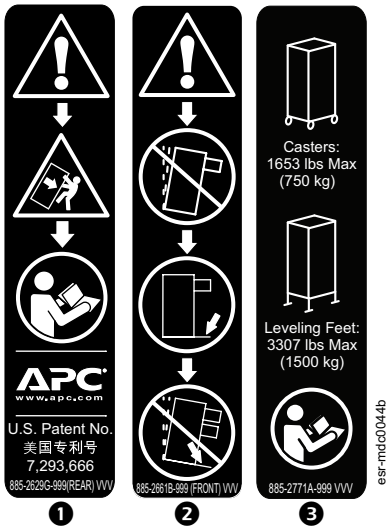

Labels. Labels ❶ and ❷, and ❸ can be found on the MDC, and communicate the following information:

Label ❶: Generic Tip Hazard.

Label ❷: Extend slide-mounted hardware once piece at a time.

Label ❸: Weight ratings.

MDC42UR2KACI: The MDC can be moved on its casters with up to 750 kg (1,653 lb) of equipment installed. Once in place, lower the leveling feet. With the leveling feet lowered, the static MDC can be loaded with up to 1,500 kg (3,307 lb) of equipment.

MDC24UR1KACI and MDC24UR500ACI: The MDC can be moved on its casters with up to 750 kg (1,653 lb) of equipment installed. With the leveling feet lowered, the static MDC can be loaded with up to 1,000 kg (2,205 lb) of equipment.

Eye bolts. To lift the MDC, remove the M12 socket screws and gaskets at the top of the MDC and install the lifting eye bolts included in the accessory box. You can use the eye bolts to lift the MDC with up to 1,500 kg (3,307 lb) additional equipment installed.

NOTE:

- Use appropriate lifting hardware to ensure a straight-line pull on the eye bolts.
- Do not use the eye bolts on the air conditioner.

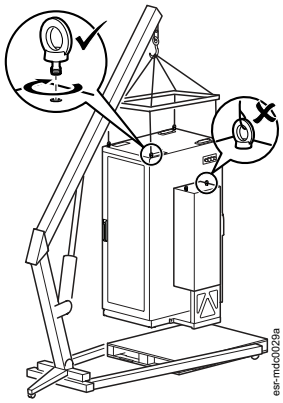

When the MDC is in its final location, re-install the M12 socket screws and rubber washers to keep the MDC sealed. Use 10–12 N•m (89–106 lb-in) torque to secure the screws and washers.

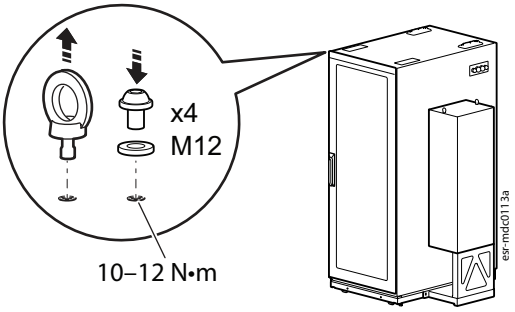

Level and Secure the MDC

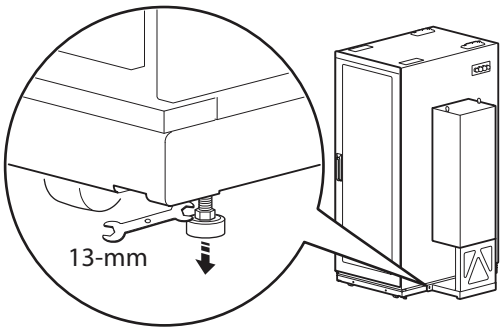

1. Use a 13-mm hex wrench to lower the leveling feet so that there is enough space to fit the shipping bracket beneath the MDC and the floor.

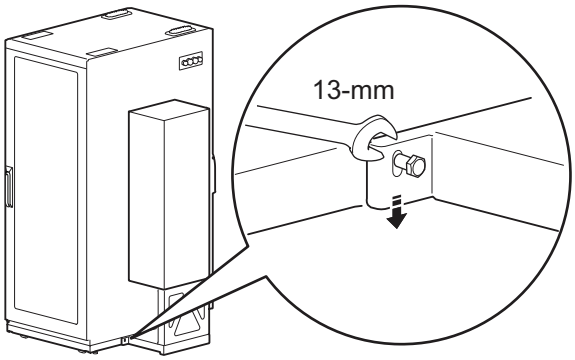

2. MDC24UR1KACI and MDC42UR2KACI only: Use 13-mm hex wrench to loosen the bolts at the bottom of the air-conditioner support and lower the support to the floor.

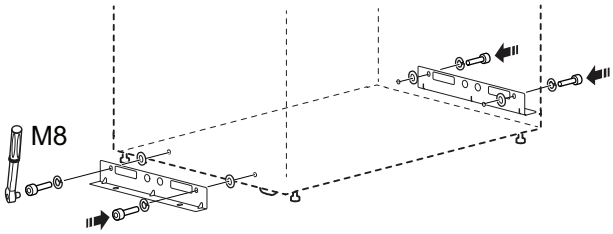

3. Use an M8 socket driver to secure the shipping brackets to the MDC with the M10 bolts and washers included in the packaging.

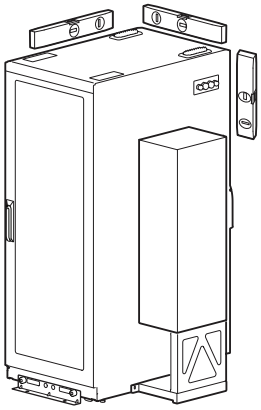

4. Make any adjustments needed to ensure the MDC weight rests evenly on the shipping brackets, the support, and leveling feet. Use a level to ensure that the MDC is level and plumb.
5. Tighten any loose fasteners on the shipping brackets or air-conditioner support.

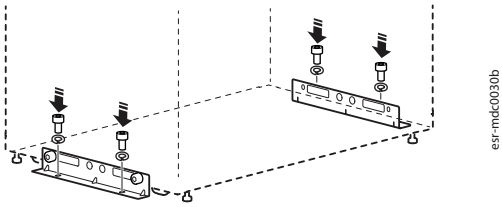

6. Secure the shipping bracket to the floor using fasteners appropriate for your floor material.

Ground the MDC

⚠ DANGER

HAZARD OF ELECTRIC SHOCK

Connect the MDC frame to the building Common Bonding Network (CBN).

Failure to follow these instructions will result in death or serious injury.

The side panels, roof, and doors are grounded to the MDC frame with 4 mm^2 (12 AWG) ground wires. The bottom cover is grounded to four studs (one stud is located at each corner of the MDC). The air conditioner is grounded with 16 AWG wire. The power distribution panel is grounded through direct contact with the rack frame.

An M8 star screw and serrated washer are preinstalled to the grounding point on the outside of the MDC. Use this hardware to connect the MDC directly to the building CBN.

- Use a Common Bonding Network Jumper kit with at least 16 mm^2 (6 AWG) wire.
- Place the serrated washer between the bonding terminal and the MDC frame.
- Torque the screw to 6.9 N•m (60 lb-in).
- Do not ground one MDC to another MDC in a cascading style. Ground each MDC directly to the building ground.

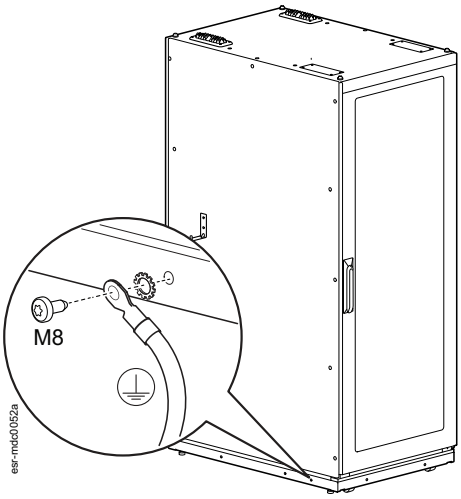

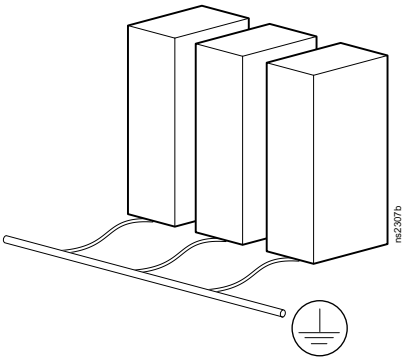

Remove the Stabilization Bracket

MDC42UR2KACI units are shipped with two stabilization brackets to help brace the MDC during shipment. Once the MDC is in its final position, remove the stabilization brackets. Save the stabilization brackets in case the MDC needs to be shipped in the future.

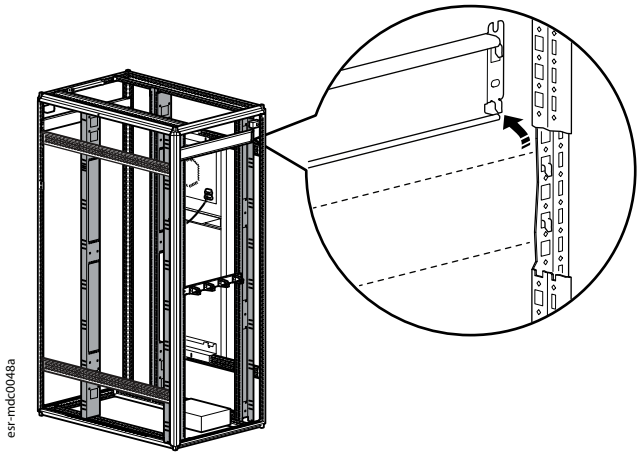

Install the Fire Extinguisher Bracket or Hardware

There are two holes in the side of the MDC for the fire extinguisher bracket and hardware. At minimum, you must install the M6 Phillips screws and washers to seal the MDC.

You can optionally install the fire extinguisher bracket with the provided M6 Phillips screws and washers as shown.

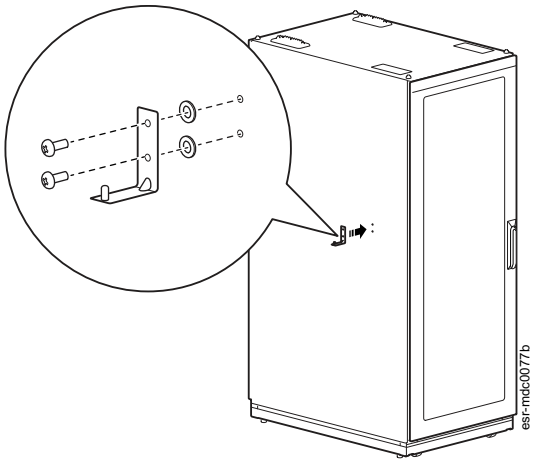

Use 5–6 N•m (44–53 lb-in) torque.

Side Panel

You can remove the side panel to access your equipment.

To remove the side panel: Remove the ground wire on the interior of the panel (A). Remove the six T30 screws at the sides of the MDC (B). Then lift the side panel off the resting brackets at the base of the MDC (C).

To install the side panel: Set the bottom of the panel on the two resting brackets at the base of the MDC (C). Holes in the bottom of the panel align to the bracket tabs. Use the six T30 screws to secure the side panel to the rack (B). Then attach the ground wire to the side panel (A).

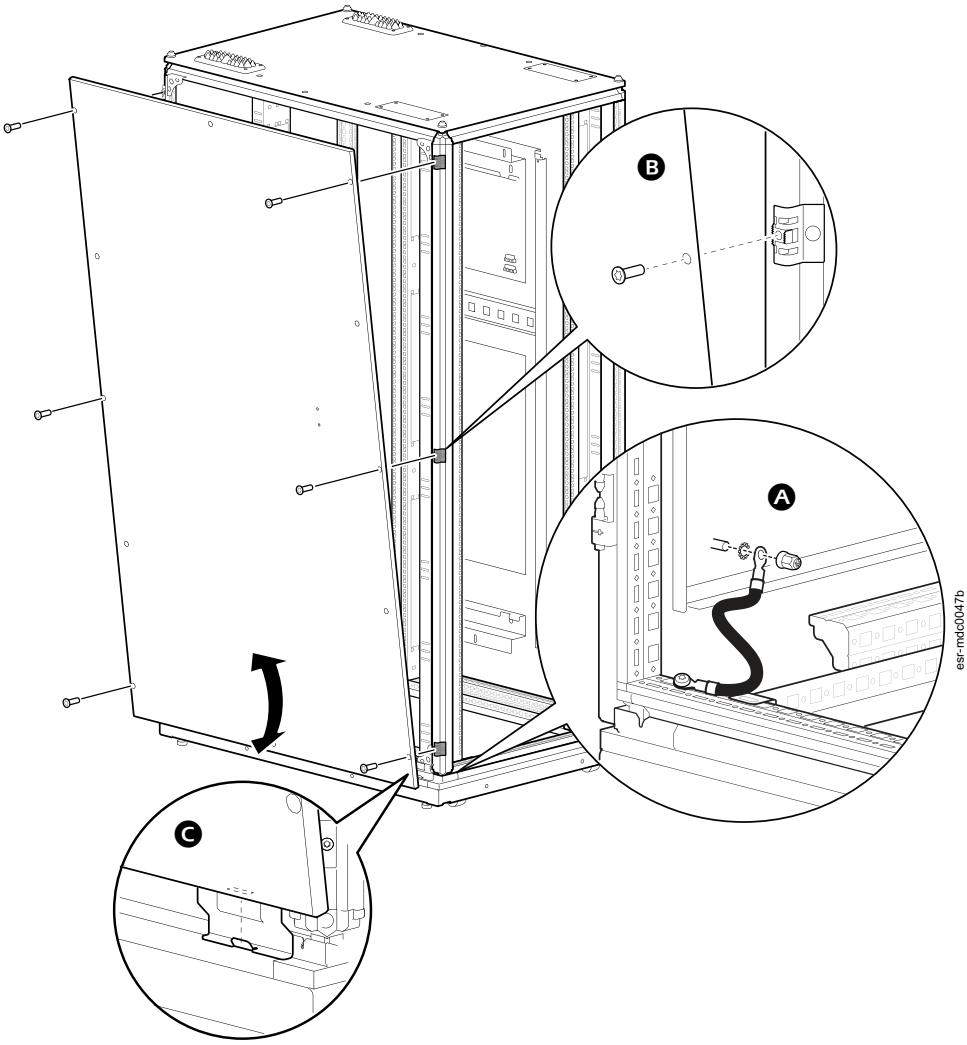

Doors

⚠ CAUTION

FALLING EQUIPMENT HAZARD

Use two people to remove, install, and reverse the doors.

Failure to follow these instructions can result in injury or equipment damage.

How to Remove the Door

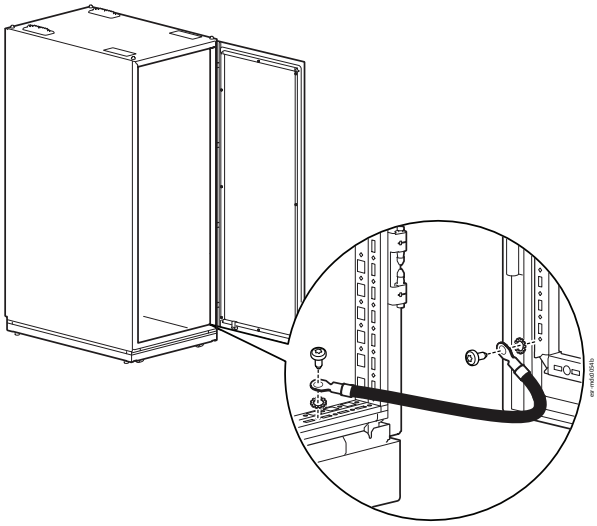

1. Unlock the door handle and open the door.

2. Remove the ground wire and any other wire connections that may interfere with the removal of the door. The provided ground wire is secured with T30 screws.

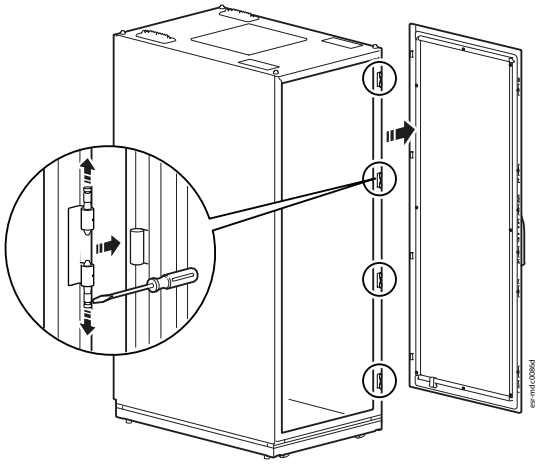

3. Have one person hold the door at a 90° angle to the MDC while another person uses a flat-head screwdriver to release the hinge pins. Then pull the door away from the MDC.

How to Install the Door

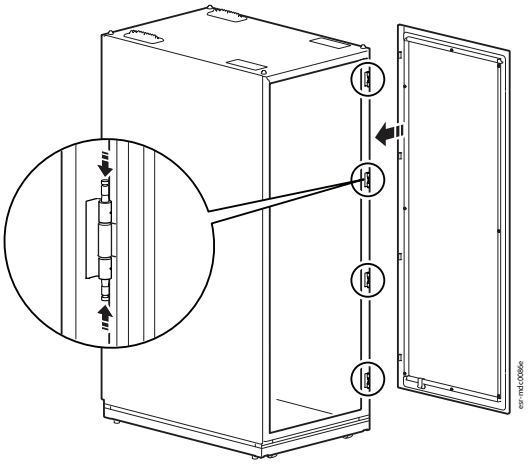

1. With the door at a 90° angle to the front of the MDC, position the door so that the hinges align with the hinge pins. Have one person hold the door in place while another pushes the hinge pins inwards to engage the hinges.

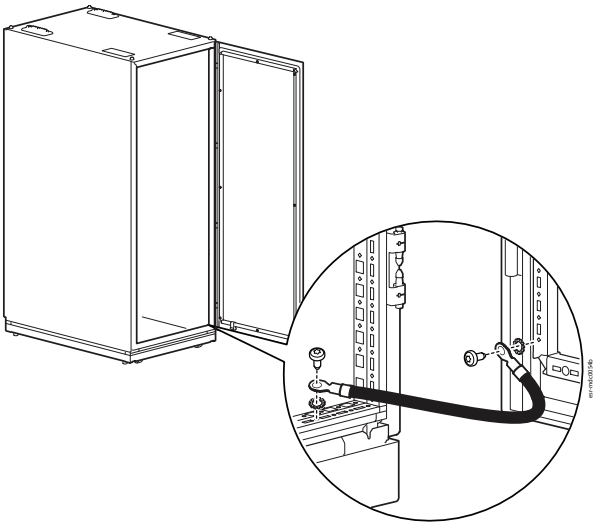

2. Connect the ground wire and any other wire connections. The provided ground wire is secured with T30 screws.

How to Reverse the Door

⚠ CAUTION

EQUIPMENT DAMAGE HAZARD

- Use two people to reverse the doors.
- Do not repeatedly remove and replace the hinges. Repeatedly installing the self-tapping screws in the screw holes will distort the screw holes.

Failure to follow these instructions can result in injury or equipment damage.

This procedure assumes that initially, when facing the MDC, the hinges are on the right, and the door opens from the left.

1. Remove the label sticker at the top of the door.

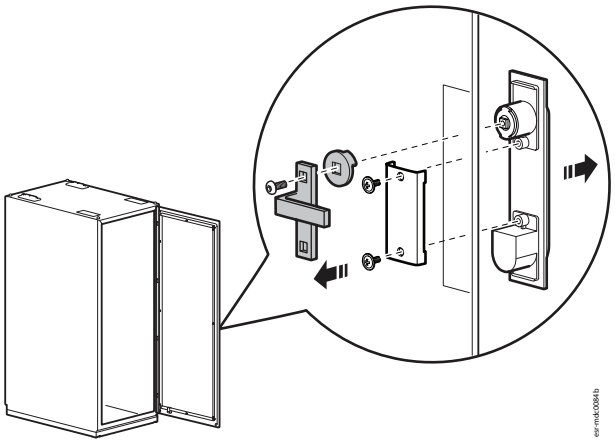

2. Remove the handle by removing the cam, cam washer, and screw plate.

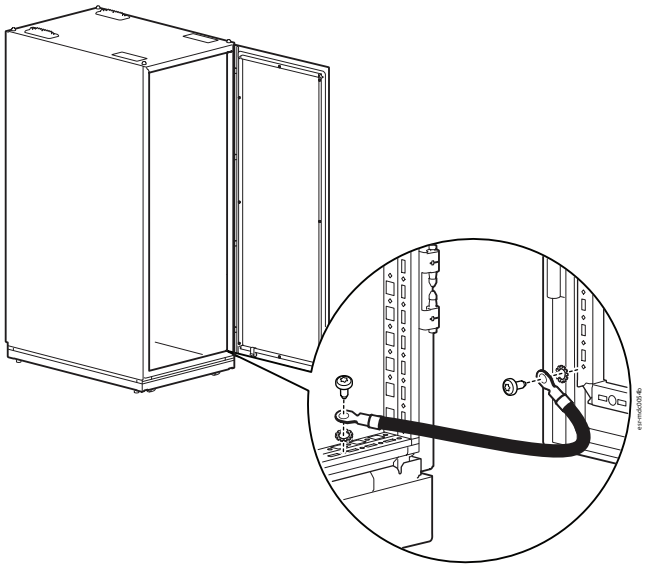

3. Remove the ground wire and any other wire connections that may interfere with the removal of the door. The provided ground wire is secured with T30 screws and washers. Save the T30 screws and washers.

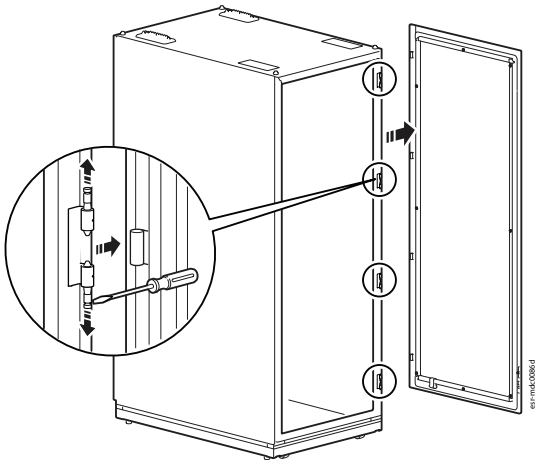

4. Remove the door: Have one person hold the door at a 90° angle to the MDC while another person uses a flat-head screwdriver to release the hinge pins. Then pull the door away from the MDC.

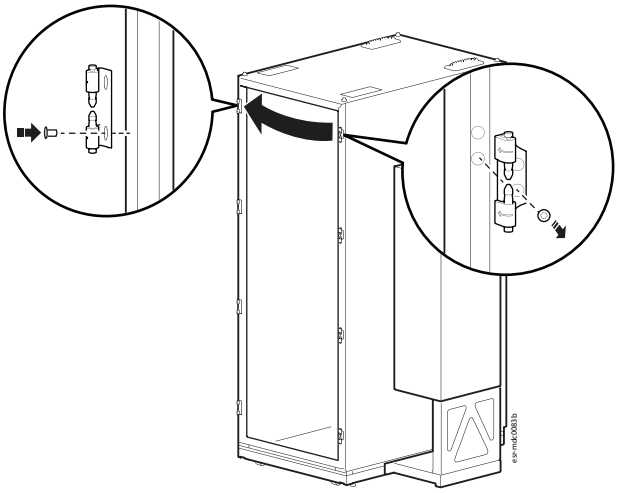

5. Move the hinges: Each hinge his held in place by one self-tapping T30 screw. Use the self-tapping screws to install the hinges to the alternate hole locations on the other side of the MDC frame. Install one screw to the bottom hole of each hinge.

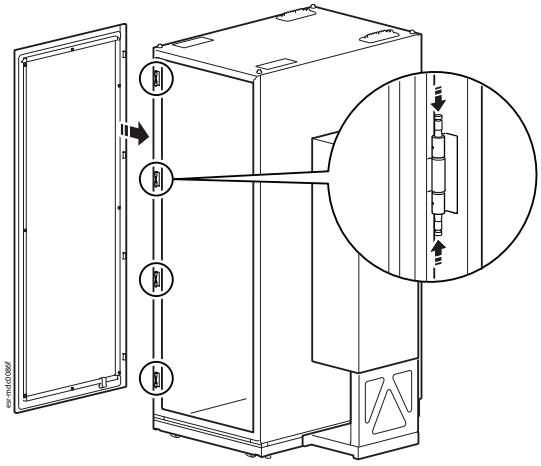

6. Install the door: With the door at a 90° angle to the front of the MDC, position the door so that the hinges align with the hinge pins. Have one person hold the door while another person pushes the hinge pins inwards to engage the hinges.

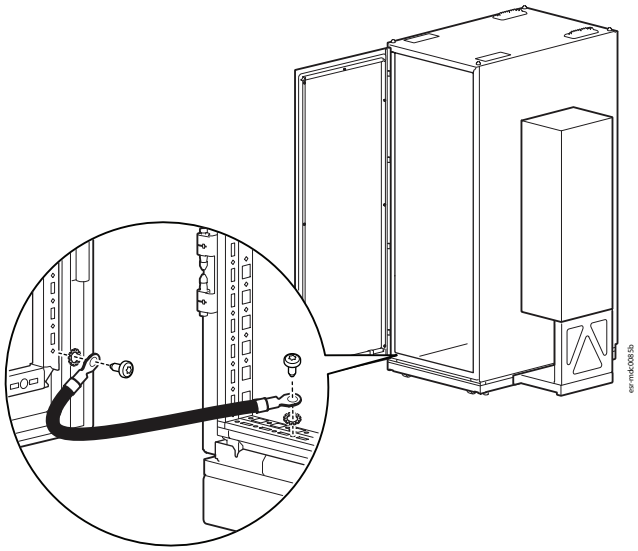

7. Connect the ground wire and any other wire connections previously disconnected. Use the T30 screws and washers saved in step 3 to secure the ground wire .

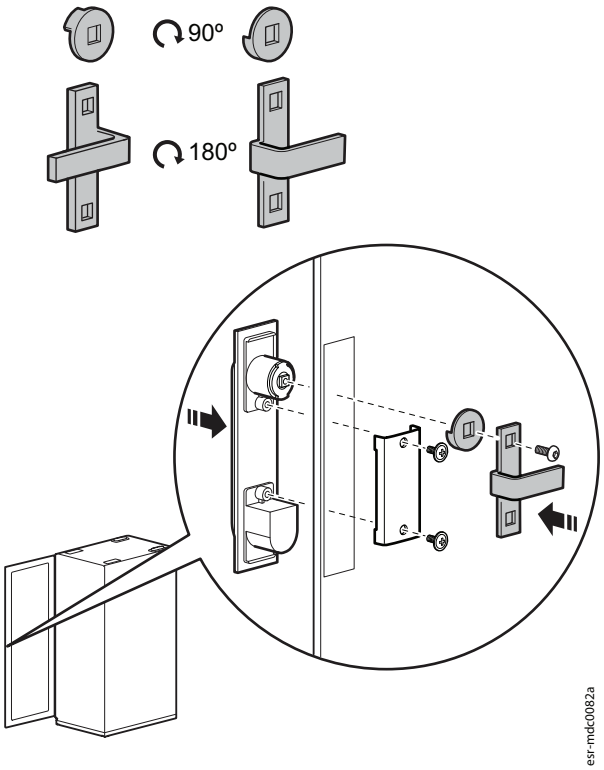

8. Locate the lock handle. Reinstall the handle with the cam washer rotated 90° from it previous position, and with the cam rotated 180° from its previous position.

Cable Routing Options

There are two cable glands plates at the top of the MDC (❶) for networking cables, and one on the side for power cables (❷).

You can purchase additional cable gland plates (NSYAECPFLT35) to install in the designated mounting spaces on the MDC (❹). Remove the existing plates by removing the M6 nuts securing them to the inside of the MDC.

You can also route wires through the panels in the base of the MDC (❸). The base panels (❸) are secured by M6 nuts. Use 3–4 N•m (27–35 lb-in) torque to secure the gland and cover plates. Drill holes and install gaskets appropriate for your wires.

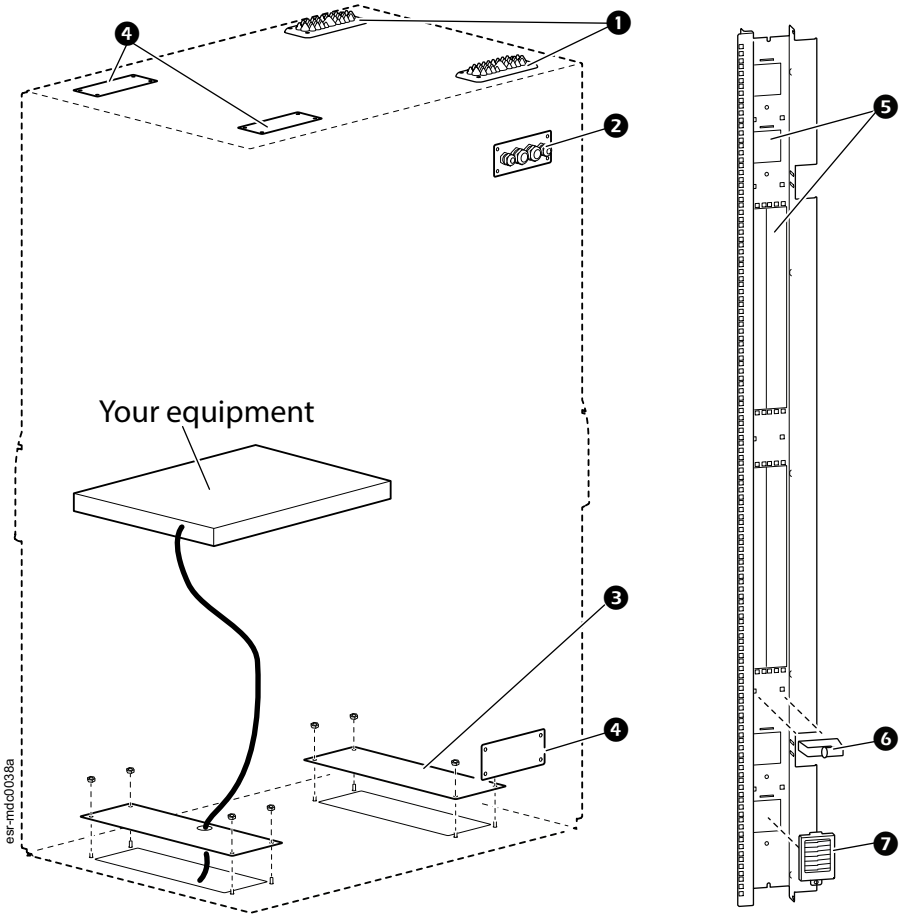

You can optionally remove the knock-outs (❺) in the mounting rails and install cable-brushes (AR7706, ❼). You can also install tooless cable management rings (AR7540, ❻) in the square holes.

Power Distribution Panel Configuration

⚠⚠DANGER

ELECTRIC SHOCK

- Connections in the power distribution panel must only be installed and serviced by qualified electricians.
- Adhere to all national and local electrical codes when bringing power to the system.
- Disconnect all power to the MDC before making changes to the power distribution panel configuration.
- Follow safe electrical work practices and wear appropriate personal protective equipment (PPE). See NFPA 70E.
- Perform appropriate Lock Out/Tag Out procedures during equipment installation and maintenance.
- Remove incoming power to the MDC before performing any work. Always use a properly rated voltage sensing device to confirm there is no voltage in the system.

Failure to follow these instructions will result in death or serious injury.

Connect Power to the Power Distribution Panel

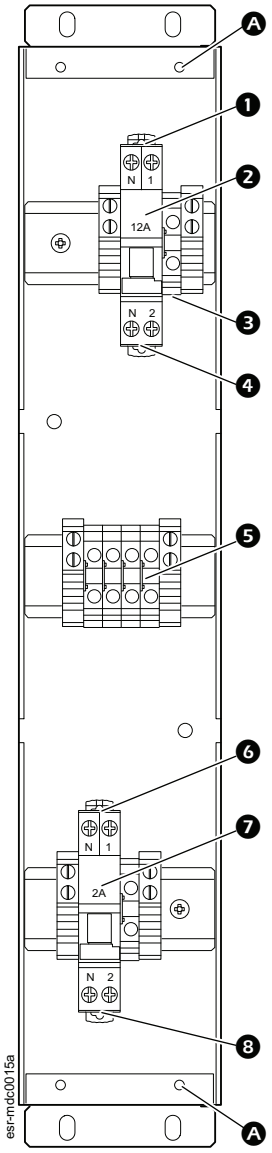

The power distribution panel provides power connection points for the air conditioner and MDC lights. You can remove the cover of the power distribution panel by loosening the M4 Phillips head screws Ⓐ.

❶	Input Power Connection* (connect at site to mains power)	❺	K1 relay (reserved for future use)
❷	CB1/ Circuit breaker 1 (air conditioner, amperage varies by model)	❻	C14 power cord connection for MDC lights (preinstalled)
❸	Grounding connection (preinstalled)	❼	CB2/Circuit breaker 2 (MDC lights, 2 A)
❹	Connection to air conditioner (preinstalled)	❽	Connection to MDC lights (preinstalled)

*Input power connection requirement: Single phase 230 V +/- 10%, 50/60 Hz , 3-core, 14 AWG

NOTE: By default, the power connection only provides power to the air conditioner. Different wire thicknesses may be required for custom configurations.

Direct the input power connection (❶) through the knockouts at the top of the power distribution panel. It is recommended to connect the input power connection directly to the mains power, as a UPS may not be able to withstand the high inrush current of the air conditioner.

Circuit breaker 2 (❼) is isolated from the power feed to the air conditioner. Power is directed to the MDC lights from the preinstalled C14 power cord (❻), which can be connected to a UPS or Rack PDU (purchased separately).

Customizing the Power Distribution Panel

DANGER

ELECTRIC SHOCK

- Connections in the power distribution panel must only be installed and serviced by qualified electricians.
- Adhere to all national and local electrical codes when bringing power to the system.
- Disconnect all power to the MDC before making changes to the power distribution panel configuration.
- Follow safe electrical work practices and wear appropriate personal protective equipment (PPE). See NFPA 70E.
- Perform appropriate Lock Out/Tag Out procedures during equipment installation and maintenance.
- Remove incoming power to the MDC before performing any work. Always use a properly rated voltage sensing device to confirm there is no voltage in the system.

Failure to follow these instructions will result in death or serious injury.

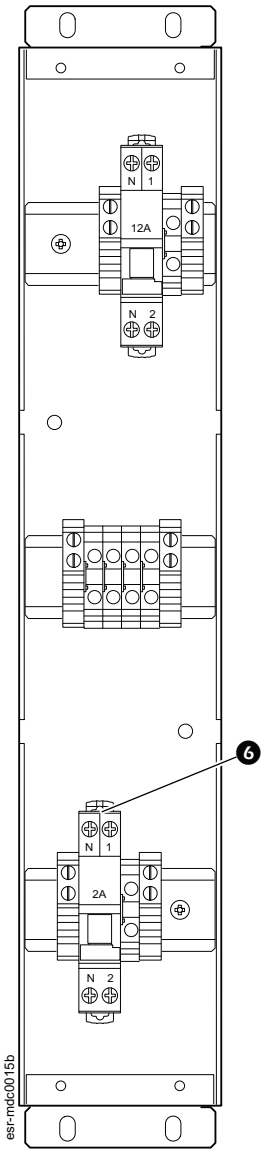

If needed, you can install an additional circuit breaker in the unused mounting space.

- You must provide any required DIN rail or snap-in mounting solutions. These can be connected to the M4x10 standoffs in the rear of the power distribution panel.
- If the additional circuit breaker is connected to the mains power, the wiring requirements for the input power connection may change. Reassess the input power connection and install appropriate wiring as needed.

You can optionally connect the MDC lights to the mains power. Remove the C14 power connection ❻ and replace it with a connection to the mains power. This option does not require a change to the power input connection.

Start Up Procedure

⚠⚠DANGER

ELECTRIC SHOCK

- Adhere to all national and local electrical codes when bringing power to the system.
- Follow safe electrical work practices and wear appropriate personal protective equipment (PPE). See NFPA 70E.

Failure to follow these instructions will result in death or serious injury.

1. Ensure that all wiring connections are secure and properly configured.
2. Insert the drain pipe (included in the accessory box) to the bottom of the air conditioner. Route the drain pipe to a floor drain. If a drain is not available, or if the drain pipe must be routed upwards, consider installing a condensate evaporator or condensate pump (not provided). Refer to the condensate evaporator or condensate pump documentation for installation instructions.

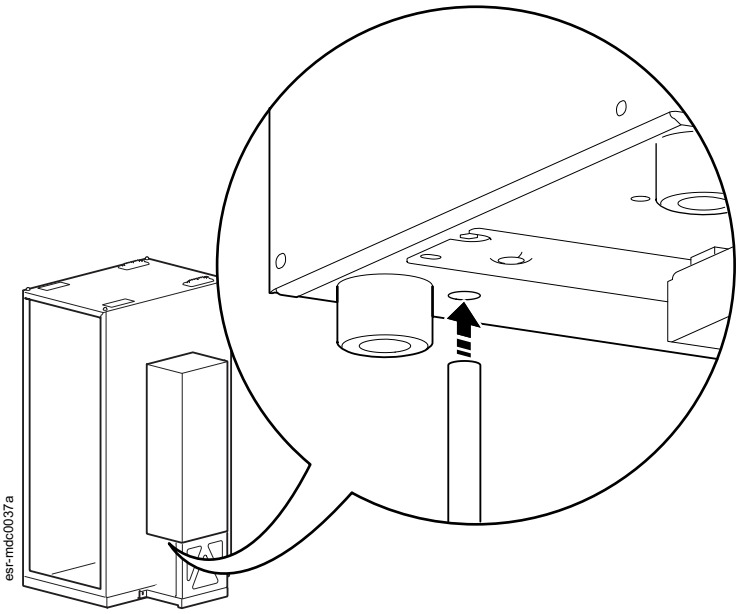

3. Turn on both circuit breakers. Ensure the MDC lights and air conditioner turn on.
4. Follow instructions in the air conditioner manual (included in the accessory box) to power on the air conditioner and set the temperature of the MDC.

Equipment Installation

⚠ WARNING

TIP HAZARD

- Secure the MDC the floor before installing equipment. If the MDC has leveling feet, ensure they are lowered to support the weight of the MDC.
- If you are unable to secure the MDC to the floor, install the heaviest equipment first and toward the bottom of the MDC to prevent it from becoming top-heavy.
- Do not extend more than one piece of equipment on sliding rails at a time.

Failure to follow these instructions can result in death, serious injury, or equipment damage.

1. Review the equipment manufacturer's installation instructions.
2. Locate the top and bottom U-space on the vertical mounting rails. Every third hole on the mounting rails is numbered to indicate the middle of a U-space.
3. Install the cage nuts on the interior of the vertical mounting rail; then install the equipment. (To remove a cage nut, squeeze the sides to release it from the square hole.)

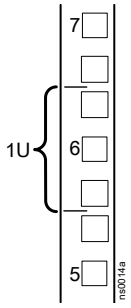

NOTE: You can use the included cage nuts and M6 Phillips head screws to install your equipment. For a neater look, you can also use the cup washers to cover screw heads.

Cage Nuts

If needed, Schneider Electric offers a cage nut hardware kit (AR8100) for use with square holes.

⚠ CAUTION

FALLING EQUIPMENT HAZARD

Do NOT install cage nuts vertically, with the tabs engaging the top and bottom of the square hole.

Failure to follow these instructions can result in injury or equipment damage.

- Install cage nuts horizontally, with the tabs engaging the sides of the square hole.
- Install the cage nuts on the interior of the vertical mounting rail.

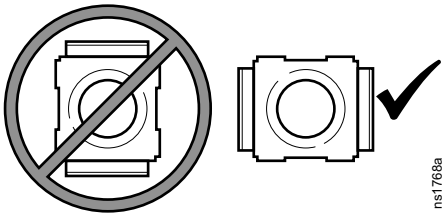

Installation

1. From inside of the cabinet, insert the cage nut into the square hole.
2. Hook one tab of the cage nut assembly through the far side of the hole.
3. Place the cage nut tool on the other side of the cage nut and pull to snap into position.

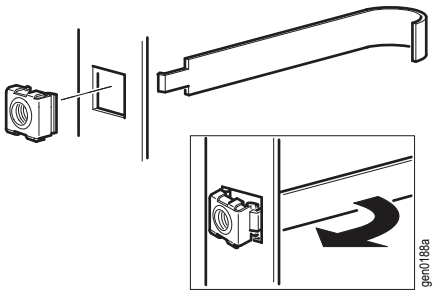

Removal

1. Remove any attached screw.
2. Grasp the cage nut and squeeze the sides to release it from the square hole.

How to Adjust the Vertical Mounting Rails

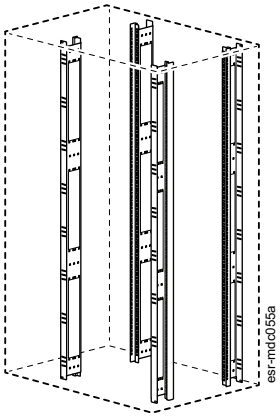

Vertical mounting rails come factory installed at 100 mm at the front of the MDC, and 750 mm at the rear of the MDC.

The vertical mounting rails are adjustable towards the front or the rear of the MDC to accommodate different rails or equipment with other depths.

A common application for the 800 mm (31.5 in.) wide MDC is to move the rails to a depth of 476 mm (18.75 in.) to accommodate networking and telecommunications equipment.

Positioning

Configuration ❶: Leave a minimum space of 100 mm (4 in) at the front and 250 mm (10 in) at the rear of the MDC to mount accessories like cable managers, Rack PDUs etc. The rear vertical mounting rails can be installed a minimum distance of **a** and can extend as far as **b**.

Configuration ❷: If there are no accessories required at rear, the rear vertical mounting rails can be extend as far as (**c**).

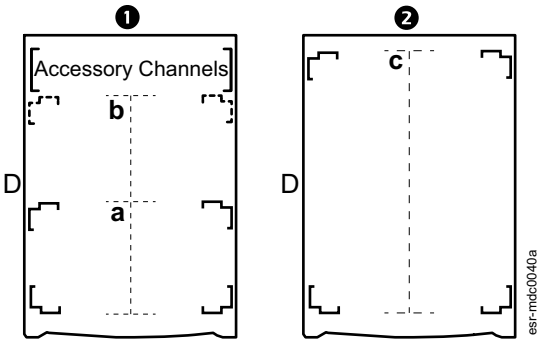

Mounting space	MDC Depth (D)	a	b	c
42 U	1200 mm (47 in)	190 mm (7 in)	750 mm (30 in)	1050 mm (41 in)
24 U	1000 mm (39 in)	190 mm (7 in)	750 mm (30 in)	850 mm (33 in)

How to Move the Vertical Mounting Rails

⚠ WARNING

FALLING EQUIPMENT

Remove all equipment installed on the vertical mounting rails before performing any adjustments.

Failure to follow these instructions can result in death, serious injury, or equipment damage.

NOTE: You can leave the power distribution panel installed while moving the vertical mounting rails. The preinstalled wires have enough slack to allow for movement.

The vertical mounting rails are held in place by T26 screws at the top and bottom. Remove the screws to reposition the vertical mounting rails.

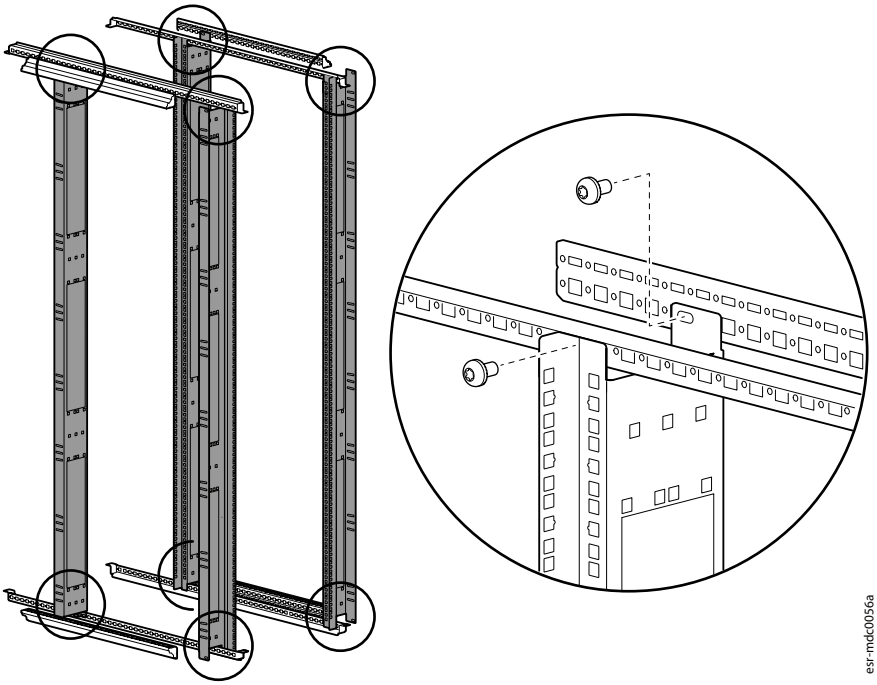

How to Connect the Air Conditioner to EcoStruxure IT

You can optionally connect the air conditioner to EcoStruxure Machine Expert with the aid of an IIoT Secure Interface Gateway (TM172SIG, not included). You can purchase the Secure Interface Gateway from www.se.com.

The IIoT Secure Interface Gateway works with EcoStruxure IT Gateway software to connect your equipment to EcoStruxure IT. You must provide a rack-mounted device to host the Gateway software. If needed, follow the instructions at community.se.com/t5/Gateway-software-installation-and/Installing-and-setting-up-EcoStruxure-IT-Gateway/ta-p/447040 to install and set up EcoStruxure IT Gateway.

For more information on installing EcoStruxure IT Gateway, visit community.se.com/t5/EcoStruxure-IT-Help-Center/ct-p/ecostruxure-it-help-center?category=ecostruxure-it-gateway&board=gateway-software-installation-and-setup.

To connect to EcoStruxure:

1. Follow the installation and commissioning instructions included with the Secure Interface Gateway. Commission the Secure Interface Gateway with the Webapp, not with EcoStruxure Machine Expert.

   For detailed instructions, see the *Modicon TM172SI• Secure Interface User Guide* (EIO0000004649). To find the user guide online, go to www.se.com/ww/en/download/. Click **Select Location** and select your location from the list. Then enter EIO0000004649 in the **Search** bar.

2. Access the Webapp of the Secure Interface Gateway.

   Under **PLC and VPN > Modbus RTU**, configure the following settings:

   - **Baud Rate: 9600**
   - **Parity, Data bits, Stop bits: N,8,1 (No parity, 8 data bits, 1 stop bit)**

   Under **PLC and VPN > Modbus TCP**, configure the following settings:

   - **Port:** 502
   - **IP address allow list:** Click **Add address**, then enter the **IP Address** and **Subnet mask** of your EcoStruxure IT Gateway server.

3. Log onto the web User Interface (web UI) of the EcoStruxure IT Gateway software and navigate to the **Device Discovery** page.

4. Click **Discovering a Modbus Device?**. Configure the following settings, then click **Discover Modbus Device**:

Option	Setting
Type	Crac
Vendor	Schneiderelectric
Family	Mdccoolingunit
Server address	1
TCP/Serial	TCP
IP address	IP address of your Secure Interface Gateway

5. You can now view the air conditioner information through EcoStruxure IT interface. You **cannot** use EcoStruxure IT to change the air conditioner settings.

Specifications

	MDC42UR2KACI	**MDC24UR1KACI**	**MDC24UR500ACI**
Electrical			
Input voltage	230 VAC +/- 10%, 50/60 Hz	230 VAC +/- 10%, 50/60 Hz	230 VAC +/- 10%, 50/60 Hz
Air conditioner rated input current (L35/L35) at 50/60 Hz	4.2 A/5.7 A	2.7 A/2.68 A	1.4 A/1.42 A
Air conditioner cooling capacity (L35/L35)	2000 W	1000 W	500 W
Power input connection	3-core, 14 AWG (customer provided)	3-core, 14 AWG (customer provided)	3-core, 14 AWG (customer provided)
Physical			
Rack dimensions	210 x 80 x 120 cm (83 x 31 x 39 in)	130 x 80 x 100 cm (51 x 31 x 39 in)	130 x 80 x 100 cm (51 x 31 x 39 in)
MDC dimensions (H x W x D)	210 x 116 x 120 cm (83 x 46 x 47 in)	130 x 110 x 100 cm (51 x 43 x 39 in)	130 x 106 x 100 cm (51 x 42 x 39 in)
Weight	315 kg (694 lb)	225 kg (496 lb)	215 kg (474 lb)
Static load capacity (with leveling feet lowered)	1,500 kg (3,307 lb)	1,000 kg (2,205 lb)	1,000 kg (2,205 lb)
Eyebolt lifting capacity	1,500 kg (3,307 lb)	1,500 kg (3,307 lb)	1,500 kg (3,307 lb)
Dynamic Load Capacity (casters)	750 kg (1,653 lb)	750 kg (1,653 lb)	750 kg (1,653 lb)
Environmental			
Operating temperature	10–40 °C (50–104 °F) 50 ℃ derating	10–40 °C (50–104 °F) 50 ℃ derating	10–40 °C (50–104 °F) 50 ℃ derating
Humidity (air conditioner)	5–95% non-condensing	5–95% non-condensing	5–95% non-condensing
IP level	IP54	—	—
Noise rating	≤ 65 DB at 1 m	≤ 65 DB at 1 m	≤ 65 DB at 1 m
Compliance			
MDC	ROHS, REACH	ROHS, REACH	ROHS, REACH
Air conditioner	Declaration of Conformity (CE) CB Certified per IEC 60335-2-40:2018, IEC 60335-1:2010 + A1:2013 + A2:2016 EMC Tested per EN 55032:2015+A1:2020 EN 55035:2017+A11:2020	Declaration of Conformity (CE) CB Certified per IEC 60335-2-40:2018, IEC 60335-1:2010 + A1:2013 + A2:2016 EMC Tested per EN 55032:2015+A1:2020 EN 55035:2017+A11:2020	Declaration of Conformity (CE) CB Certified per IEC 60335-2-40:2018, IEC 60335-1:2010 + A1:2013 + A2:2016 EMC Tested per EN 55032:2015+A1:2020 EN 55035:2017+A11:2020

One-year Factory Warranty

The limited warranty provided by Schneider Electric in this Statement of Limited Factory Warranty applies only to products you purchase for your commercial or industrial use in the ordinary course of your business.

Terms of Warranty

Schneider Electric warrants its products to be free from defects in materials and workmanship for a period of one year from the date of purchase. The obligation of Schneider Electric under this warranty is limited to repairing or replacing, at its sole discretion, any such defective products. This warranty does not apply to equipment that has been damaged by accident, negligence or misapplication or has been altered or modified in any way. Repair or replacement of a defective product or part thereof does not extend the original warranty period. Any parts furnished under this warranty may be new or factory-remanufactured.

Non-transferable Warranty

This warranty extends only to the original purchaser who must have properly registered the product. The product may be registered at www.apc.com.

Exclusions

Schneider Electric shall not be liable under the warranty if its testing and examination disclose that the alleged defect in the product does not exist or was caused by end user's or any third person's misuse, negligence, improper installation or testing. Further, Schneider Electric shall not be liable under the warranty for unauthorized attempts to repair or modify wrong or inadequate electrical voltage or connection, inappropriate on-site operation conditions, corrosive atmosphere, repair, installation, exposure to the elements, Acts of God, fire, theft, or installation contrary to Schneider Electric recommendations or specifications or in any event if the Schneider Electric serial number has been altered, defaced, or removed, or any other cause beyond the range of the intended use.

THERE ARE NO WARRANTIES, EXPRESS OR IMPLIED, BY OPERATION OF LAW OR OTHERWISE, OF PRODUCTS SOLD, SERVICED OR FURNISHED UNDER THIS AGREEMENT OR IN CONNECTION HEREWITH. SCHNEIDER ELECTRIC DISCLAIMS ALL IMPLIED WARRANTIES OF MERCHANTABILITY, SATISFACTION AND FITNESS FOR A PARTICULAR PURPOSE. SCHNEIDER ELECTRIC EXPRESS WARRANTIES WILL NOT BE ENLARGED, DIMINISHED, OR AFFECTED BY AND NO OBLIGATION OR LIABILITY WILL ARISE OUT OF, SCHNEIDER ELECTRIC RENDERING OF TECHNICAL OR OTHER ADVICE OR SERVICE IN CONNECTION WITH THE PRODUCTS. THE FOREGOING WARRANTIES AND REMEDIES ARE EXCLUSIVE AND IN LIEU OF ALL OTHER WARRANTIES AND REMEDIES. THE WARRANTIES SET FORTH ABOVE CONSTITUTE SCHNEIDER ELECTRIC'S SOLE LIABILITY AND PURCHASER'S EXCLUSIVE REMEDY FOR ANY BREACH OF SUCH WARRANTIES. SCHNEIDER ELECTRIC WARRANTIES EXTEND ONLY TO PURCHASER AND ARE NOT EXTENDED TO ANY THIRD PARTIES.

IN NO EVENT SHALL SCHNEIDER ELECTRIC, ITS OFFICERS, DIRECTORS, AFFILIATES OR EMPLOYEES BE LIABLE FOR ANY FORM OF INDIRECT, SPECIAL, CONSEQUENTIAL OR PUNITIVE DAMAGES, ARISING OUT OF THE USE, SERVICE OR INSTALLATION, OF THE PRODUCTS, WHETHER SUCH DAMAGES ARISE IN CONTRACT OR TORT, IRRESPECTIVE OF FAULT, NEGLIGENCE OR STRICT LIABILITY OR WHETHER SCHNEIDER ELECTRIC HAS BEEN ADVISED IN ADVANCE OF THE POSSIBILITY OF

SUCH DAMAGES. SPECIFICALLY, SCHNEIDER ELECTRIC IS NOT LIABLE FOR ANY COSTS, SUCH AS LOST PROFITS OR REVENUE, LOSS OF EQUIPMENT, LOSS OF USE OF EQUIPMENT, LOSS OF SOFTWARE, LOSS OF DATA, COSTS OF SUBSTITUTES, CLAIMS BY THIRD PARTIES, OR OTHERWISE.

NO SALESMAN, EMPLOYEE OR AGENT OF SCHNEIDER ELECTRIC IS AUTHORIZED TO ADD TO OR VARY THE TERMS OF THIS WARRANTY. WARRANTY TERMS MAY BE MODIFIED, IF AT ALL, ONLY IN WRITING SIGNED BY AN SCHNEIDER ELECTRIC OFFICER AND LEGAL DEPARTMENT.

Warranty Claims

Customers with warranty claims issues may access the customer support network through the Support page, www.apc.com/support. Select your country from the country selection pull-down menu at the top of the Web page. Select the **Support** tab to obtain contact information for customer support in your region.

APC
70 Mechanic Street
Foxboro, MA 02035
USA

https://www.apc.com

As standards, specifications, and design change from time to time, please ask for confirmation of the information given in this publication.

TME23731A